DWG NO: 08-025-011	LOCATION: J:\ROBERT S\	MODEL: 08-025-011	WEIGHT: 3.60

REVISIONS

ECR	REV.	DESCRIPTION	DATE	INITIAL

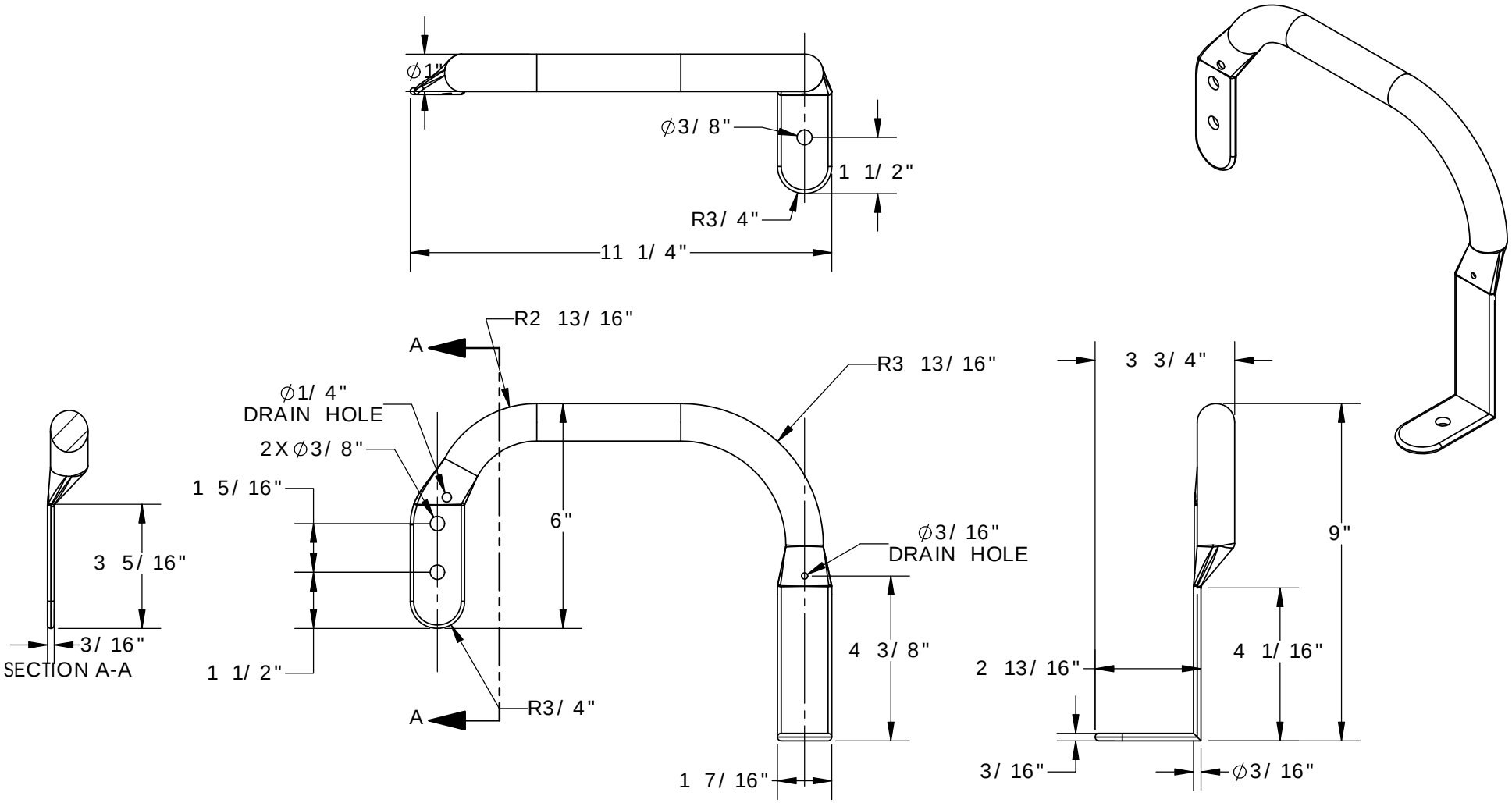

PROPRIETARY AND CONFIDENTIAL
THE INFORMATION CONTAINED IN THIS DRAWING IS THE SOLE PROPERTY OF VESTIL MANUFACTURING CO. ANY REPRODUCTION IN PART OR AS A WHOLE WITHOUT THE WRITTEN PERMISSION OF VESTIL MANUFACTURING CO. IS PROHIBITED.

UNLESS OTHERWISE SPECIFIED:
REMOVE ALL BURRS AND SHARP EDGES

DIMENSIONS ARE IN INCHES

CONCENTRIC	.006 TIR	.060 TIR
ANGLES	± 0° 30'	± 1° 0'
DECIMALS	x.xxx ± .005 x.xx ± .010 x.x ± .025	± .015
FRACTIONS	± 1/32	± 1/16
TOLERANCES	MACHINE	WELDMENT

COMMENTS:

DO NOT SCALE DRAWING

Vestil Manufacturing Co.

DESCRIPTION:
CHROME PLATED HIP RESTRAINT (LH)

PRODUCT MODEL NO: LTS-HR

DRAWN BY:	DATE:	SCALE: 1:4	SIZE
RS	07/20/2012		A

MAT'L: A-36 HR ST'L OR EQUAL

SHEET 1 OF 1 | DWG. NO. 08-025-011 | REV

5 4 3 2 1